# COMTEC CRYSTALS Group Data Sheet

Crystal Clock Oscillator 3XO-12C5.0 DIL14 5.0V

- micro-processor clocks
- compact metal package
- CMOS/TTL Square Wave
- Available in many standard and special frequencies
- packed in antistatic tubes
- RoHS conform; Lead-free product

Crystal Clock Oscillator 3XO-12C5.0 DIL14 5.0V

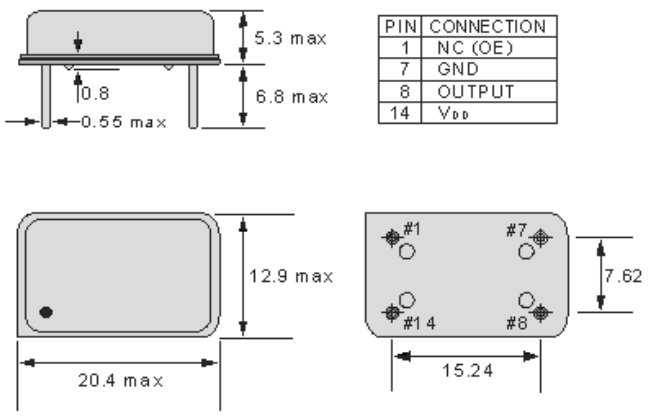


| PIN | CONNECTION |
|---|---|
| 1 | NC (OE) |
| 7 | GND |
| 8 | OUTPUT |
| 14 | $V_{DD}$ |

CMOS/TTL Output Wave Form

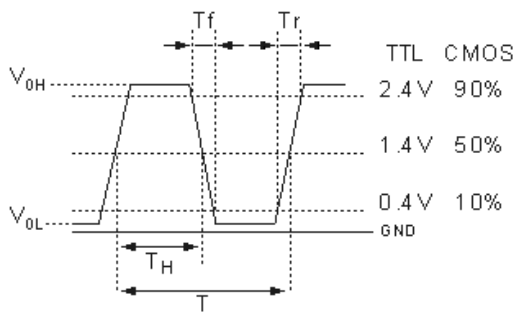


## Specifications - Product No. G016384000BARURX10CA

| | |
|---|---|
| Holder Type: | Crystal Clock Oscillator 3XO-12C5.0 DIL14 5.0V |
| Frequency: | 16.384000 MHz |
| Frequency Stability at 25°C: | ± 100 ppm |
| Operating Temperature Range: | ± 100 ppm over ±0°C to +70°C (incusive of 25°C tolerance, ±10% input voltage variation, load change, aging, shock and vibration ) |
| Storage Temperature: | -50°C to +100°C |
| Power Supply Voltage (Vdd): | + 5.0V D.C. ± 10% |
| Maximum Supply Current: | 20.0 mA max. |
| Output Load CL: | 2 ~ 10 (LS) TTL gates, 15 pF HCMOS |
| Output Symmetry (Duty Cycle): | 40/60% |
| Output Voltage (V0H) (V0L): | 90% of Vdd min. / 10% of Vdd max. |
| Rise/Fall Time (10% to 90% Vdd): | 10 ns max. < 5 ns typical |
| Start Up Time: | 10 ms max. < 5 ms typical |
| Moisture sensitivity level: | MSL=1 per IPC/JEDEC J-STD-020 C |
| Aging: | < ±5ppm max. / year (max.) |

GERMANY:
COMTEC CRYSTALS GmbH · Sultenstrasse 12-14
85586 Poing / GERMANY
Phone +49 8121 778160 · Fax +49 8121 778177
e-Mail info@comtec-crystals.com
Internet: http://www.comtec-crystals.com
Subject to change without prior notice.

Technical Data and Graphics are all under Copyright (c) of Comtec Crystals Group.

FRANCE:
COMTEC CRYSTALS SARL · 23, rue du Faucon
67500 Haguenau / FRANCE
Phone +33 388 732162 · Fax +33 388 730118
e-Mail sales@comtec-crystals.com
Internet: http://www.comtec-crystals.com
Sous réserve de modifications.