COMTEC CRYSTALS Group Data Sheet

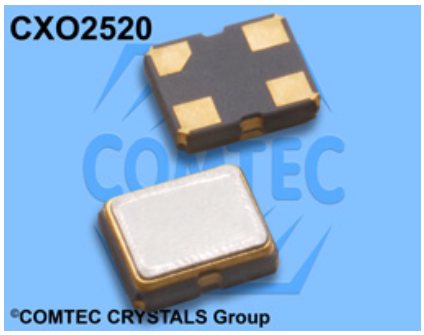

Crystal Clock Oscillator CXO2520T3.3 3.3V, Low cost

- SMD in ceramic case (2.5 x 2.0 x 0.9) mm
- Tri-State Enable / Disable
- CMOS/TTL Square Wave
- on Tape & Reel (Tape 8mm)
- RoHS conform; Lead-free product
- Vibration: MIL-STD-202F method 204, 35G, 50 to 2000 Hz
- Shock: MIL-STD-202F method 213B, test cond. E, 1000GG 1/2 sine wave
- Available in many standard and special frequencies

Crystal Clock Oscillator CXO2520T3.3 3.3V

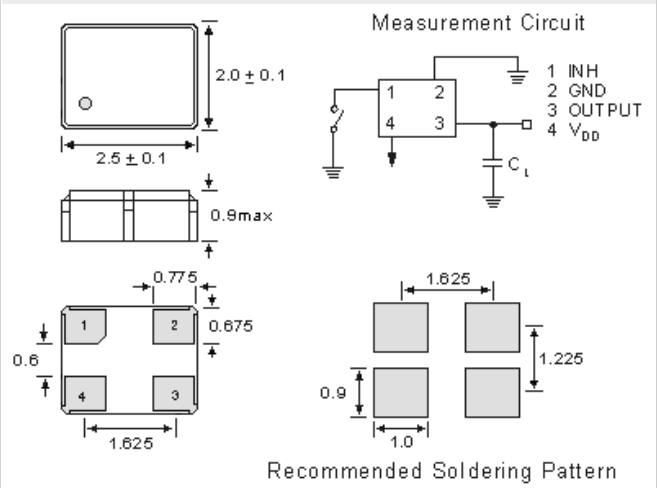

CMOS/TTL Output Wave Form

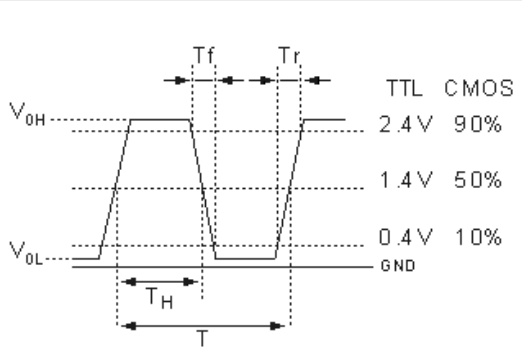

Specifications - Product No. G008000000FACUPN43BB

Holder Type:	Crystal Clock Oscillator CXO2520T3.3 Tri-State 3.3V (Voltage code is " 3.3 ")
Frequency:	8.000000 MHz
Frequency Stability at 25°C:	± 50.0 ppm
Operating Temperature Range:	± 50.0 ppm over -40°C to +85°C (incusive of 25°C tolerance, ±10% input voltage variation, load change, aging, shock and vibration)
Storage Temperature:	-50°C to +105°C
Power Supply Voltage (Vdd):	+ 3.3V D.C. ± 5 %
Maximum Supply Current:	8.0 mA max.
Output Load CL:	15 pF CMOS / 10LS TTL gates max.
Output Symmetry (Duty Cycle):	45/55%
Output Voltage (V0H) (V0L):	90% of Vdd min. / 10% of Vdd max.
Rise/Fall Time (10% to 90% Vdd):	10 ns max. < 5 ns typical
Start Up Time:	10 ms max. < 5 ms typical
Tri-state Function Pin 1:	Pin 1 = H or open.... Output active at pin 3 Pin 1 = L.... high impedance at pin 3
Phase Jitter (12 kHz to 20 MHz):	< 1pS RMS
Aging:	< ±5ppm max. / year (max.)
Reflow Condition:	260°C max. for 10 sec.

GERMANY:
COMTEC CRYSTALS GmbH · Sultenstrasse 12-14
85586 Poing / GERMANY
Phone +49 8121 778160 · Fax +49 8121 778177
e-Mail info@comtec-crystals.com
Internet: http://www.comtec-crystals.com
Subject to change without prior notice.

Technical Data and Graphics are all under Copyright (c) of Comtec Crystals Group.

FRANCE:
COMTEC CRYSTALS SARL · 23, rue du Faucon
67500 Haguenau / FRANCE
Phone +33 388 732162 · Fax +33 388 730118
e-Mail sales@comtec-crystals.com
Internet: http://www.comtec-crystals.com
Sous réserve de modifications.