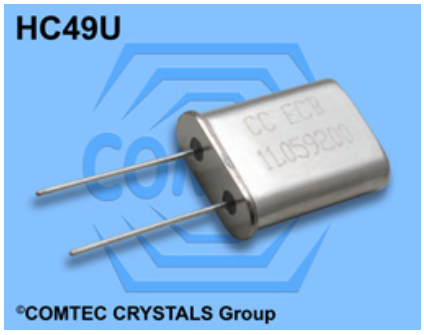

Quartz Crystal Unit HC49U

- Standard Quartz Crystal
- Available with Radial Taping Package (from 1 k)
- Available in many standard and special frequencies
- RoHS conform; Lead-free product
- Link to Productgroup
  http://www.comtec-crystals.com/produkte.php?id=C7

External Dimensions

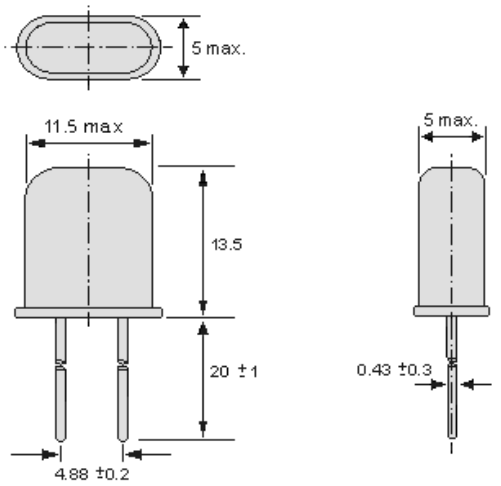

Soldering Conditions

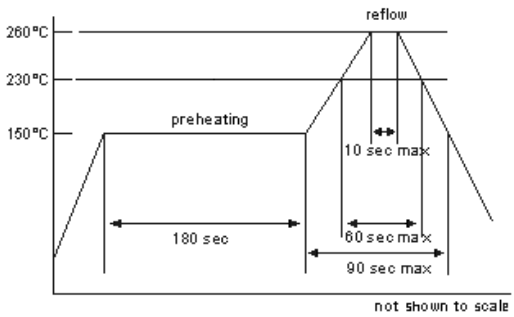

Specifications - Product No. A057950000AA3EPS32DB

Holder Type:	HC49U
Frequency:	57.950000 MHz
Frequency Stability at 25°C:	±30 ppm
Temperature Stability:	±50ppm @ -30°C to +80°C
Storage Temperature:	-50°C to +105°C
Drive Level:	100µW (500µW max.)
Load Capacitance (CL):	30 pF
Shunt Capacitance (C0):	< 7pF
Crystal Cut & Vibration Mode:	AT - cut, 3rd overtone
Equivalent Series Resistance:	
Aging:	< ±3ppm max. / year (max.)

GERMANY:
COMTEC CRYSTALS GmbH · Sultenstrasse 12-14
85586 Poing / GERMANY
Phone +49 8121 778160 · Fax +49 8121 778177
e-Mail info@comtec-crystals.com
Internet: http://www.comtec-crystals.com
Subject to change without prior notice.

Technical Data and Graphics are all under Copyright (c) of Comtec Crystals Group.

FRANCE:
COMTEC CRYSTALS SARL · 23, rue du Faucon
67500 Haguenau / FRANCE
Phone +33 388 732162 · Fax +33 388 730118
e-Mail sales@comtec-crystals.com
Internet: http://www.comtec-crystals.com
Sous réserve de modifications.