COMTEC CRYSTALS Group Data Sheet

Quartz Crystal Unit HC49SM, h = 4.5mm max.

- Standard Quartz Crystal SMD with 2 pads
- Metal Case
- on Tape & Reel
- Available in many standard and special frequencies
- RoHS conform; Lead-free product

External Dimensions

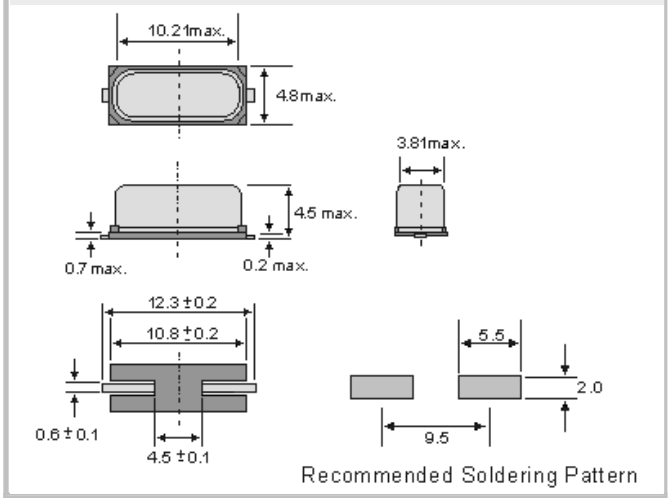

Soldering Conditions

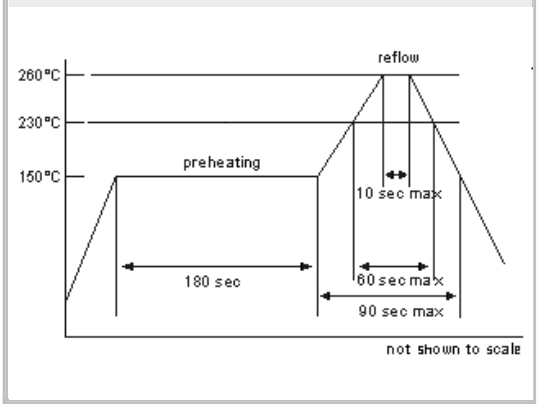

Specifications - Product No. A025000000BAFGPN43DB

Holder Type:	HC-49SM with 2 pads
Frequency:	25.000000 MHz
Frequency Stability at 25°C:	±30 ppm
Temperature Stability:	±50ppm @ -40°C to +85°C
Storage Temperature:	-50°C to +105°C
Drive Level:	100µW (500µW max.)
Load Capacitance (CL):	12 pF
Shunt Capacitance (C0):	< 7pF
Crystal Cut & Vibration Mode:	AT- cut, fundamental
Equivalent Series Resistance:	40 Ohm max.
Aging:	< ±3ppm max. / year (max.)

GERMANY:
COMTEC CRYSTALS GmbH · Sultenstrasse 12-14
85586 Poing / GERMANY
Phone +49 8121 778160 · Fax +49 8121 778177
e-Mail info@comtec-crystals.com
Internet: http://www.comtec-crystals.com
Subject to change without prior notice.

Technical Data and Graphics are all under Copyright (c) of Comtec Crystals Group.

FRANCE:
COMTEC CRYSTALS SARL · 23, rue du Faucon
67500 Haguenau / FRANCE
Phone +33 388 732162 · Fax +33 388 730118
e-Mail sales@comtec-crystals.com
Internet: http://www.comtec-crystals.com
Sous réserve de modifications.