COMTEC CRYSTALS Group Data Sheet

Crystal Clock Oscillator 3XO-12C5.0 DIL14 5.0V

- micro-processor clocks
- compact metal package
- CMOS/TTL Square Wave
- Available in many standard and special frequencies
- packed in antistatic tubes
- RoHS conform; Lead-free product

Crystal Clock Oscillator 3XO-12C5.0 DIL14 5.0V

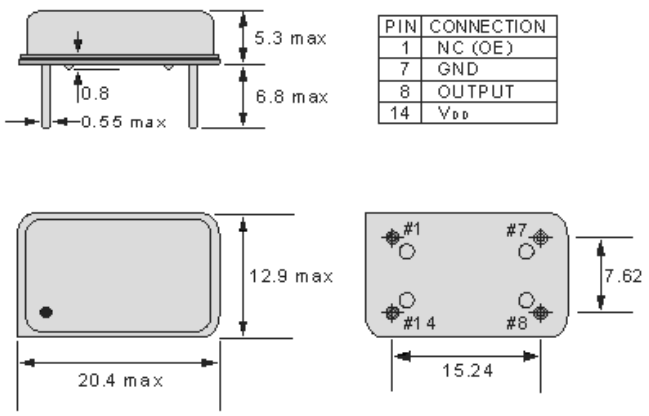

PIN	CONNECTION
1	NC (OE)
7	GND
8	OUTPUT
14	V_{DD}

CMOS/TTL Output Wave Form

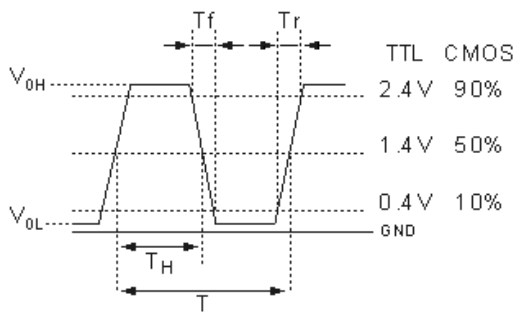

Specifications - Product No. G042000000BARURX10CA

Holder Type:	Crystal Clock Oscillator 3XO-12C5.0 DIL14 5.0V
Frequency:	42.000000 MHz
Frequency Stability at 25°C:	± 100 ppm
Operating Temperature Range:	± 100 ppm over ±0°C to +70°C (incusive of 25°C tolerance, ±10% input voltage variation, load change, aging, shock and vibration)
Storage Temperature:	-50°C to +100°C
Power Supply Voltage (Vdd):	+ 5.0V D.C. ± 10%
Maximum Supply Current:	30.0 mA max.
Output Load CL:	2 ~ 10 (LS) TTL gates, 15 pF HCMOS
Output Symmetry (Duty Cycle):	40/60%
Output Voltage (V0H) (V0L):	90% of Vdd min. / 10% of Vdd max.
Rise/Fall Time (10% to 90% Vdd):	10 ns max. < 5 ns typical
Start Up Time:	10 ms max. < 5 ms typical
Moisture sensitivity level:	MSL=1 per IPC/JEDEC J-STD-020 C
Aging:	< ±5ppm max. / year (max.)

GERMANY:
COMTEC CRYSTALS GmbH · Sultenstrasse 12-14
85586 Poing / GERMANY
Phone +49 8121 778160 · Fax +49 8121 778177
e-Mail info@comtec-crystals.com
Internet: http://www.comtec-crystals.com
Subject to change without prior notice.

Technical Data and Graphics are all under Copyright (c) of Comtec Crystals Group.

FRANCE:
COMTEC CRYSTALS SARL · 23, rue du Faucon
67500 Haguenau / FRANCE
Phone +33 388 732162 · Fax +33 388 730118
e-Mail sales@comtec-crystals.com
Internet: http://www.comtec-crystals.com
Sous réserve de modifications.