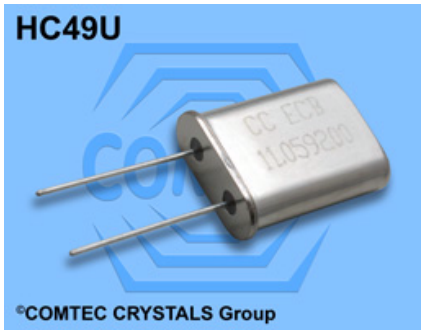


Quartz Crystal Unit HC49U

- Standard Quartz Crystal
- Available with Radial Taping Package (from 1 k)
- Available in many standard and special frequencies
- RoHS conform; Lead-free product
- Link to Productgroup
  http://www.comtec-crystals.com/produkte.php?id=C7

External Dimensions

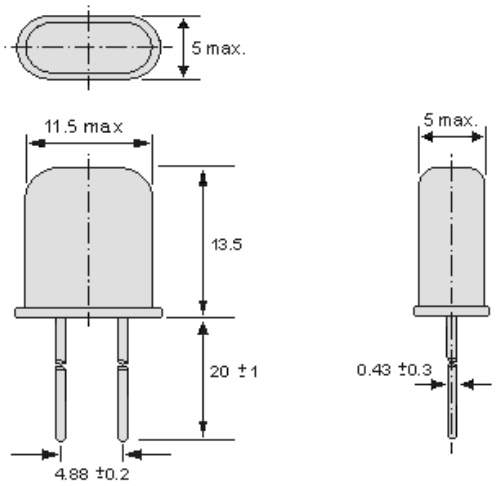


Soldering Conditions

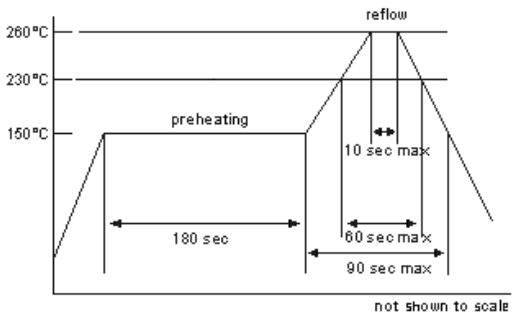


## Specifications - Product No. A057125000AA3EPS32DB

| | |
|---|---|
| Holder Type: | HC49U |
| Frequency: | 57.125000 MHz |
| Frequency Stability at 25°C: | ±30 ppm |
| Temperature Stability: | ±50ppm @ -30°C to +80°C |
| Storage Temperature: | -50°C to +105°C |
| Drive Level: | 100µW (500µW max.) |
| Load Capacitance (CL): | 30 pF |
| Shunt Capacitance (C0): | < 7pF |
| Crystal Cut & Vibration Mode: | AT - cut, 3rd overtone |
| Equivalent Series Resistance: | |
| Aging: | < ±3ppm max. / year (max.) |

GERMANY:
COMTEC CRYSTALS GmbH · Sultenstrasse 12-14
85586 Poing / GERMANY
Phone +49 8121 778160 · Fax +49 8121 778177
e-Mail info@comtec-crystals.com
Internet: http://www.comtec-crystals.com
Subject to change without prior notice.

Technical Data and Graphics are all under Copyright (c) of Comtec Crystals Group.

FRANCE:
COMTEC CRYSTALS SARL · 23, rue du Faucon
67500 Haguenau / FRANCE
Phone +33 388 732162 · Fax +33 388 730118
e-Mail sales@comtec-crystals.com
Internet: http://www.comtec-crystals.com
Sous réserve de modifications.